110/SPM/7 X SP3L
customizable

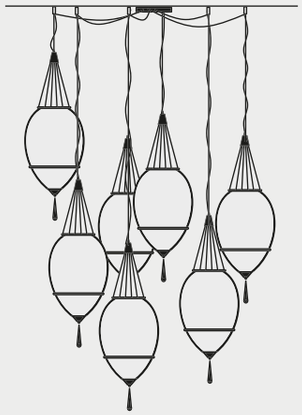

110/SPL/3 X SP3L

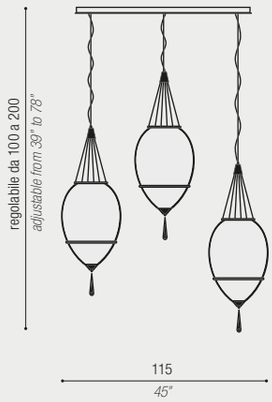

110/SP/3L

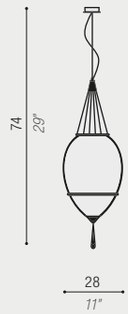

110(A)/AP/1L

110(B)/AP/1L

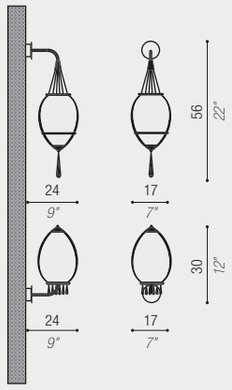

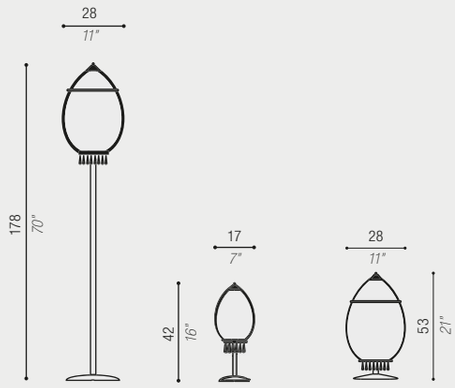

110/LTE/3L 110/LTA/P/1L 110/LTA/G/3L

versioni disponibili

legenda a pag. 175

15 W E27 LED	5 W E14 LED	Europe
8 W E26 LED	5 W E12 LED	USA & Canada

EAC 0416854 IP 20

NOTE Le lampadine non sono incluse. Si raccomanda l'uso di prodotti di alta qualità OSRAM o PHILIPS.
Bulbs are not included. The use of high quality OSRAM or PHILIPS products is recommended.
Луковицы не включены. Рекомендуется использовать высококачественные продукты OSRAM или PHILIPS.